TRITON®

TRITON® Tasty

Modern fresh-keeping drinking-water system without the usage of chemicals

Krampitz®
TANKSYSTEM GMBH

Comparison of treatments of microbial contaminations

Conventional disinfection methods

Nowadays, chlorination is still the disinfection process most often used. However, this method may lead to disinfection by-products like Chloramines (combined chlorine) and trihalogen methane, which has been proven to cause cancer.

Allergies, inflammations and irritations are other unpleasant consequences of the use of chlorine. Especially in the presence of organic substances, such as humic substances, the oxidative disinfection with chlorine has its limits. The microbial decomposable organic substances are degraded from macromolecular size to low molecular weight material by the addition of chlorine and its oxidative effect. Therefore, they are much better suited as a nutrient for microorganisms, thus contributing to a greater extent of recontamination in the pipeline network.

Conventional drinking-water conditioning systems for the treatment of microbial contaminants

Disadvantages of the chlorines dosing:

- permanent cost by chlorine consumption and dependence on suppliers
- permanent costs by laboratory monitoring for dosing quantity
- impairment of water quality in taste and smell
- incorrect dosage possible and therefore danger of accidents
- health hazards caused by poisoning, cauterization, formation of cancer-causing gases (e.g. chloroform)

Disinfection method using ultraviolet light

Ultraviolet rays are high-energy, electromagnetic radiation that occur in the natural spectrum of the radiation going out from the sun.

The lamps used for ultraviolet disinfection have their highest emission value at 254 nm and are almost identical with the absorption curve of DNA, the carrier of all genetic information.

A treatment effect can be obtained when the liquid runs past the ultraviolet light lamp in a defined ratio and in a defined speed. Due to the high absorbance of the nucleic acids acting as DNA building blocks in this emitter zone, a photochemical reaction is triggered that causes an interruption in the genetic information for cell proliferation and metabolism. The microorganisms are rendered inactive in this way and are made harmless.

This physical process inactivates microorganisms, bacteria and viruses in the water without chemicals and without change in water characteristics.

Combating of microbial contamination by using special ultraviolet light lamps in conjunction with activated carbon multi-layer filter.

Advantages

- no use of chemicals
- quick and effective disinfection (immediately usable)
- no odor or taste detracting
- easy handling and robust application
- no permanent laboratory monitoring
- low operating costs
- no environmental impact, since the process is sustainable (sunlight!), monitoring the wavelength
- no formation of harmful secondary products
- no health hazards associated with the application
- disinfection by chlorine-resistant pathogens
- compact modular design, thereby fast and easy assembly (plug and use) and adaptation to the needs

Legionella combating

- A special ultraviolet light technology is used in connection with the base module or supplemented for hot water applications.

Content

Functional diagramm

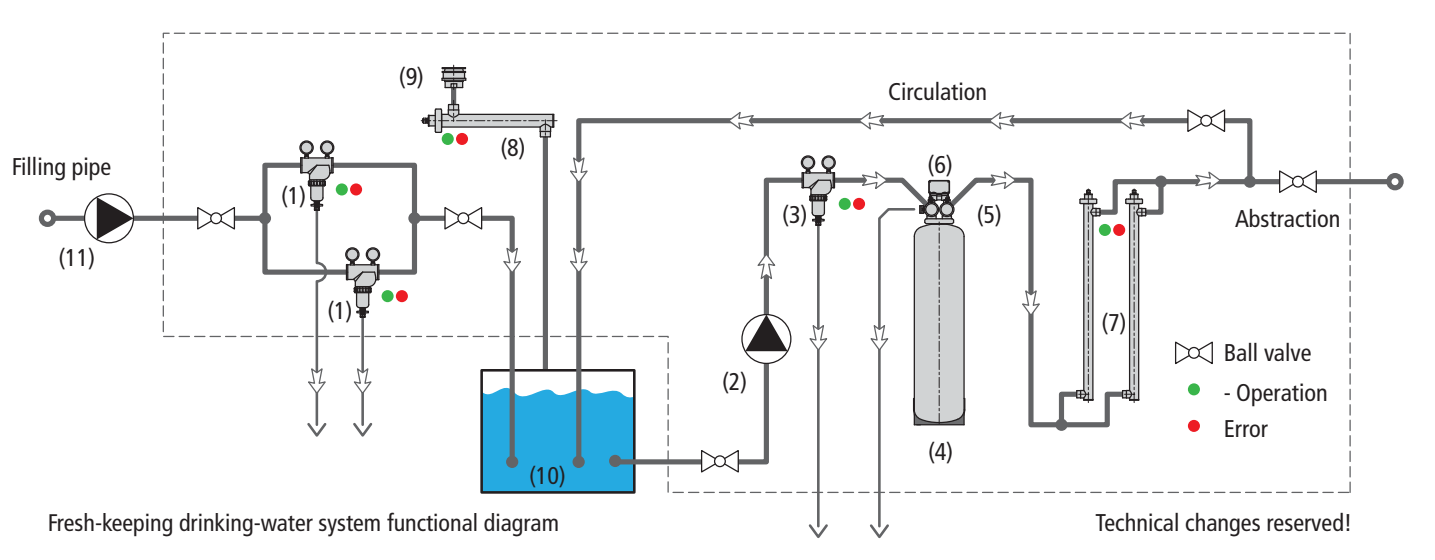

Legend/ components

(1) pre-filter, coarse, self-cleaning
(2) Centrifugal pump, capacity 50 ltr./min.
(3) Security filter, coarse, self-cleaning
(4) pressure vessel
(5) central control valve
(6) electronic control panel
(7) UV-treatment system with UV-tubes
(8) ventilation duct with UV-SET
(9) drainage/venting fittings
(10) water storage tank
(11) transfer pump

Note: Additional pollution of drinking water by harmful ingredients such as arsenic, hydrogen sulfide, iron, manganese can be removed by alternative or additional multi-layer filter modules with specific granules.

Multi-layer filters/ operating mode

An „ideal" filter is formed in a natural way due to the vertical coating of the inverse multi-layer filter. After a certain operating time, a so-called „filter cake" is formed. The result is increased filter resistance with the sensor message: backwash required!

Automatically, the backwash is done by an integrated control unit by building up a pressure difference through the filter cake.

Continuous operation/ cleaning operation
(continous)

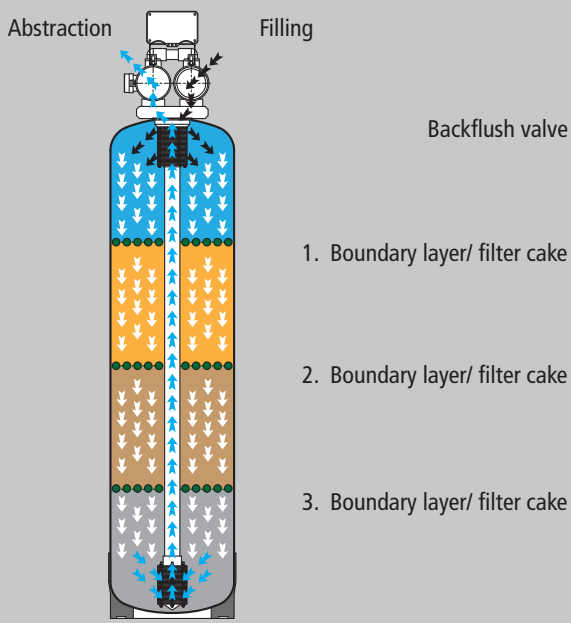

Backwash operation
(at times pressure depending)

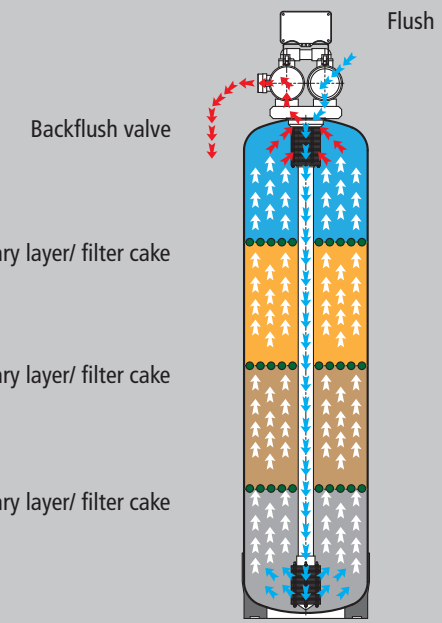

The water which has to be treated flows through the housing and is selectively bypassed at the quartz immersion tube, in which the lamp is mounted. The well-defined water film thickness (distance between the UV-light exit surface of the quartz tube and the inner wall of the housing) ensures optimum penetration of water by the ultraviolet-light.

UV-treatment plant

for water disinfection, consisting of:

- UV-irradiation treatment tubes
- Power supply (box) and OPD monitoring unit with UV-sensor including OTC-lifetime monitoring

OPD - monitoring with UV-sensor

For the monitoring of UV-systems, UV-sensors are required with the associated monitoring and should be standard in modern facilities. OPD controls the UVC-irradiance of the used ultraviolet lamps. It is installed behind the control box's front panel.

OTC - lifetime monitoring

This system works as a normal operating hours meter. After applying power, the meter starts running. It is installed behind the control box's front panel.

The UV-treatment system for water disinfection is characterized by an extremely high disinfection performance with compact design and low power consumption.

Classically, the UV-treatment system consists of a low-pressure mercury lamp, which is centered in a stainless steel reactor vessel and protected by a quartz immersion tube, so that no radiation can leak outside. The UV-output is monitored by a UV-sensor, which provides visual or audible indicators of the UV-lamp's condition.

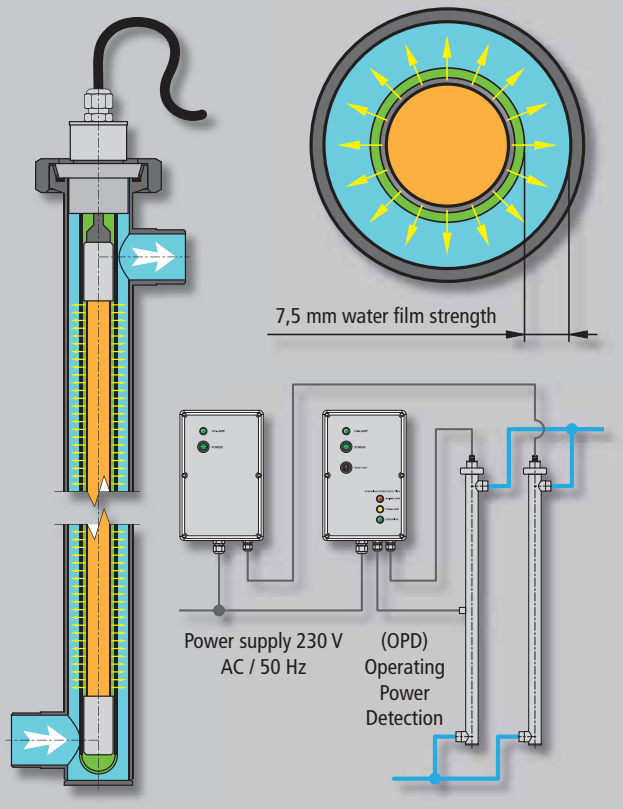

Drinking-water tank container

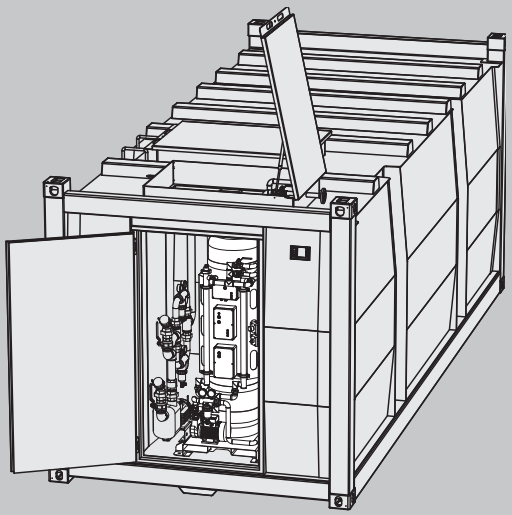

The Minotaur® storage tank container is a cubic, single-walled construction. It is integrated into an ISO container frame and combines all the advantages of this system in itself. This refers in particular to:

- transport - international approval for transport by ship, rail and road (CSC) in a drained and cleaned state,
- storage - stacks of up 8 units possible (empty)
- security - high, static strength through design,
- storage capacity - optimum space capacity ratio by cubic design,
- arrangement of the equipment (is located and protected in a niche of the tank).

The functional niche is front side installed and includes fresh-keeping drinking-water system with control and filling system. The storage tank container needs a fixed connection to a power supply unit for the operation. (Exception: for option - diesel Gen-Set for self-supply).

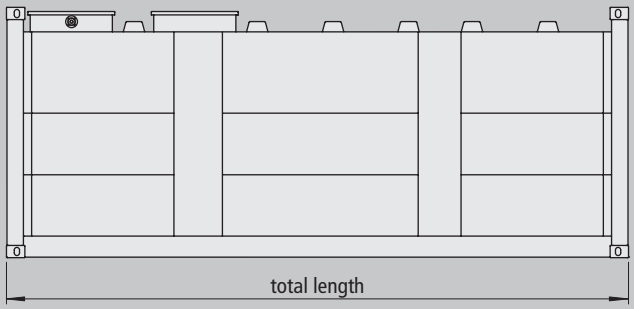

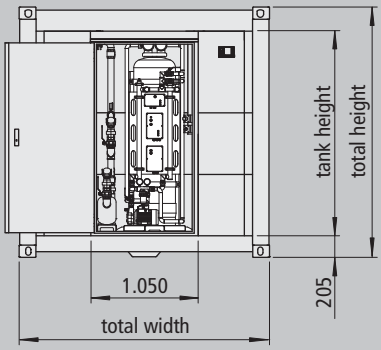

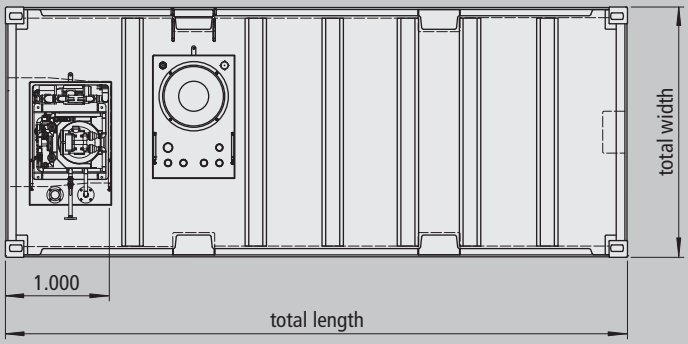

tank type	volumen 100 %	volumen 95 %	total length	total width	total height	tank height	weight (empty)
art. no.	liter	liter	mm	mm	mm	mm	kg (approx.)
KCE-ST-V6-10	10.600	10.000	2.991	2.438	2.438	2.000	2.400
KCE-ST-V6-20	24.400	23.300	6.058	2.438	2.438	2.000	4.200
KCE-ST-V6-20-HC	29.200	28.000	6.058	2.438	2.896	2.500	4.800
KCE-ST-V6-40	51.900	49.400	12.192	2.438	2.438	2.000	7.200
KCE-ST-V6-40-HC	62.600	59.700	12.192	2.438	2.896	2.500	8.600

Components

a.) Composite pressure vessels and distribution system
Material inner tank made of LD-PE, rotationally melted fiber glass - epoxy resin winding
Container volume: 170 liters, weight: 20 kg
Operating pressure: min. 0 bar / max. 10 bar
Operating temperature: min. +1 ° C / max. +50 ° C

b.) Fully automatic central control valve for filling, extraction and circulation.
The control valve is always used in house- and swimming pool technology, as well as in commercial and industrial areas, when water has to be filtered.
Operating pressure: min. 1.5 bar / max. 9 bar
Operating temperature: min. +1 ° C / max. +40 ° C
Flow operation: 20 m³ / h at 1 bar
Backwash flow: 11 m³ / h at 1 bar

c.) Electronic control panel
Small computer used to control compact de-icing systems and demanganese facilities, as well as softening and denitrification.
- Regeneration and flushing after the programmed period at fixed (in days) day / night times
- Regeneration and rinsing after consumption of the programmed amount of water to the defined day/ night time

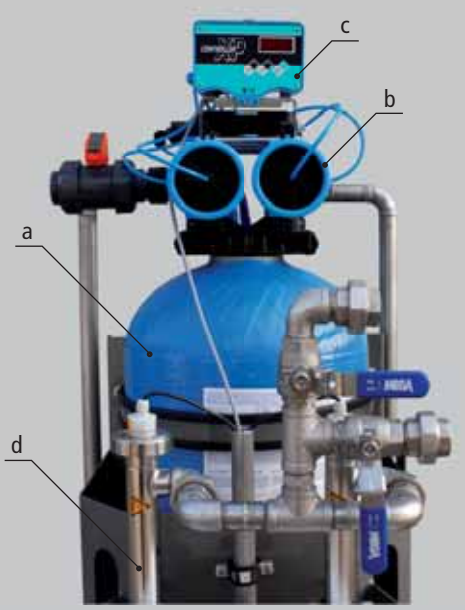

The full automated fresh-keeping drinking-water system Triton® Tasty is a time-controlled filtration system for the removal of fine solids, in accordance with the Drinking Water Ordinance. The fully automated central control valve with electronic control unit controls programmable or fixed back-rinsing and its predetermined backwash. The pressure vessel is made of corrosion resistant fiberglass. For the filter material coarse gravel / fine granular quartz gravel / granules and hydroanthracite NI is used.

d.) It is used in the disinfection of drinking water for flow rates up to 2,500 l/h of drinking water with UV-lamp with a defined thickness. The used UV-lamps are characterized by long life, high performance and low disinfectant energy consumption.

Technical Data:
- UVC-Transmission: 90 % T1 cm, dose: < 500 J/m²
- lamp lifetime: 10.000 h
- water temperature min. 2°C / max. 40°C
- housing inner wall (reactor): stainless steel 1.4571
- weight: 3,4 kg
- gasket: FPM, operating pressure max. 10 bar
- electric connection 230 V AC / 50 Hz

Krampitz Tanksystem GmbH

Headquarters Dahlenburg
Dannenberger Str. 15
21368 Dahlenburg/Lbg, Germany
Tel.: +49(0)5851/944 596-1
Fax: +49(0)5851/944 596-9

Office Salzwedel
Order Processing
Siedlung des Friedens 40
29410 Salzwedel, Germany
Tel.: +49(0)3901/3088-100
Fax: +49(0)3901/3088-131

Production site Henningen
Henningen 78
29410 Salzwedel OT Henningen, Germany
Tel.: +49(0)39038/9078-0
Fax: +49(0)39038/9078-10

www.mining-tanks.com
info@mining-tanks.com

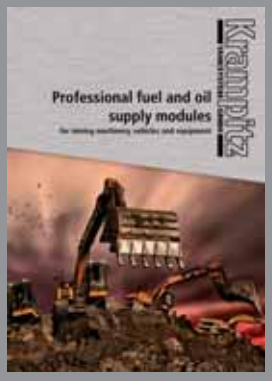

Professional fuel and oil supply modules

Storage tank containers

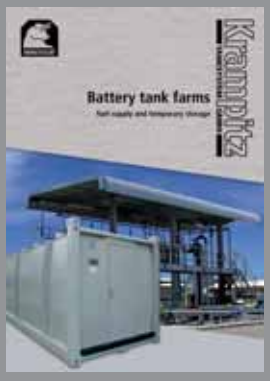

Battery tank farms

Mining gas station containers

Airfield gas station

Office container

Mobile service module for on-site employment in mining

Mobile maintenance module for on-site employment in mining

KRP-5000 - Automatic fuel cleaning and treatment station for tank systems

TRITON® Tasty fresh-keeping drinking-water system

About the information in this brochure:

The illustrations and descriptions can also contain accessories and optional equipment which do not belong to the standard scope of supply. Color deviations are caused by printing technology. Duplication of this document is allowed only in complete form or with express authorization by Krampitz Tanksystem GmbH.

Version 05.2016 - English